ROD FLOOR 100/120

BARRIERA SINGOLA
SINGLE-RAIL BARRIER

-30°
RESISTANT TO LOW TEMPERATURES

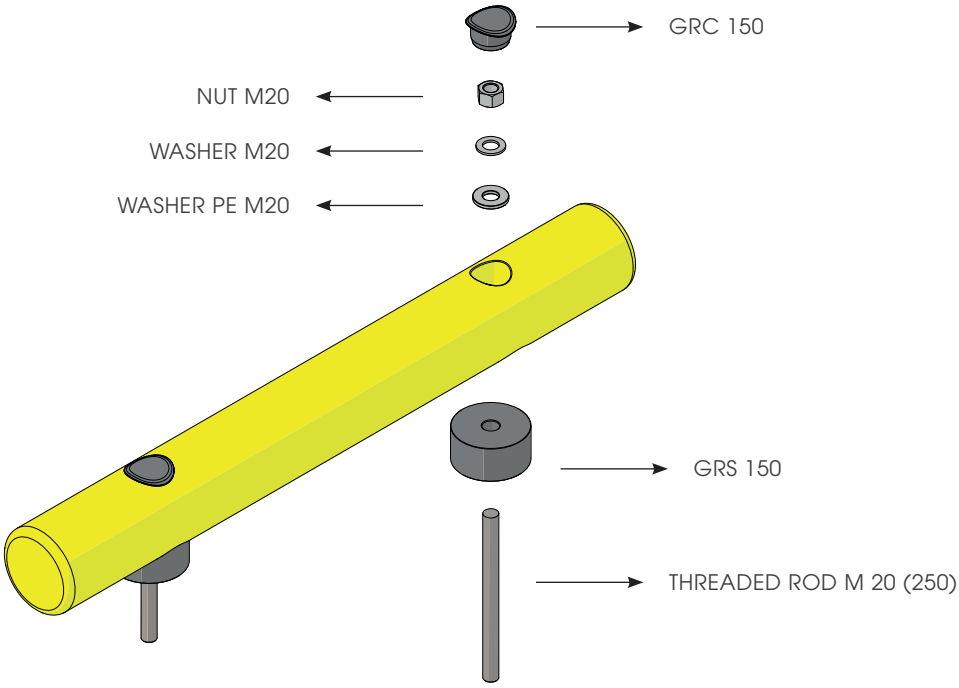

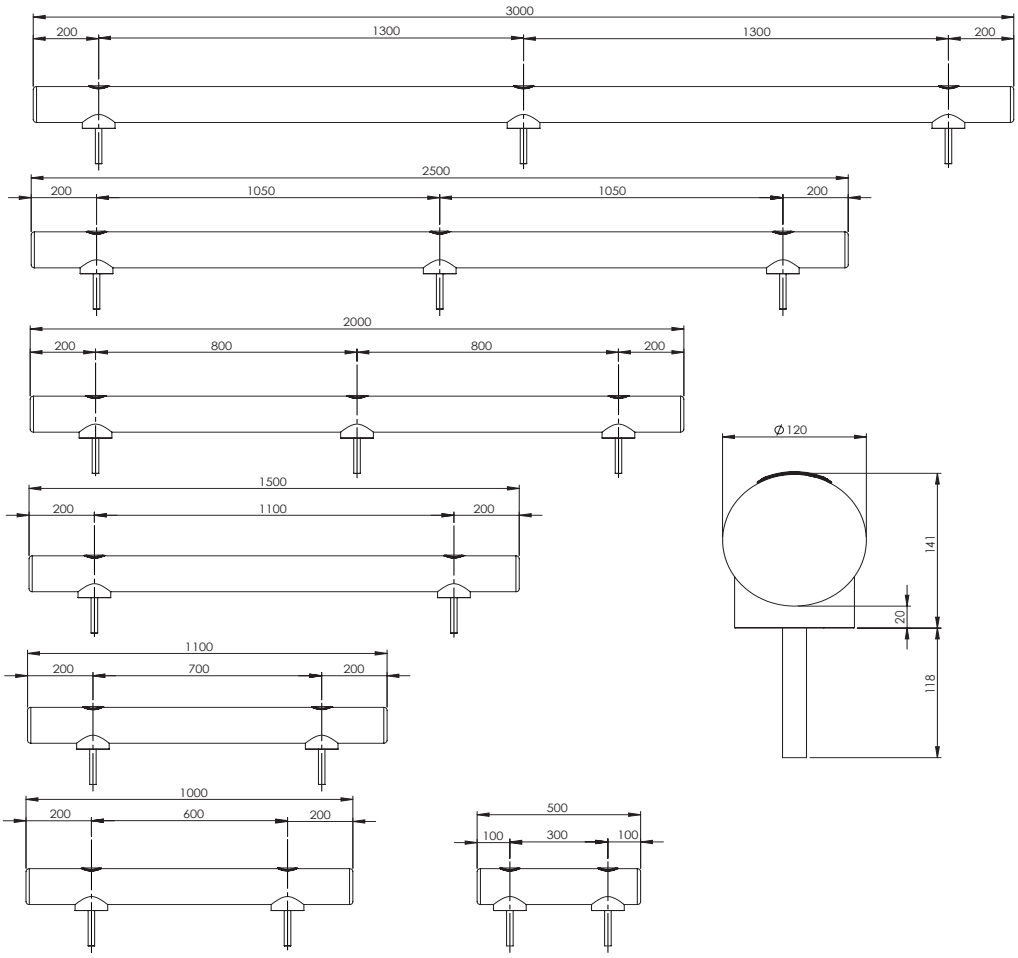

ROD FLOOR 100/120

ISTRUZIONI DI INSTALLAZIONE
ASSEMBLY INSTRUCTIONS

-30°
RESISTANT TO LOW TEMPERATURES

ONLY WITH RESIN

SF20 STAINLESS STEEL

ANCHOR (FR)

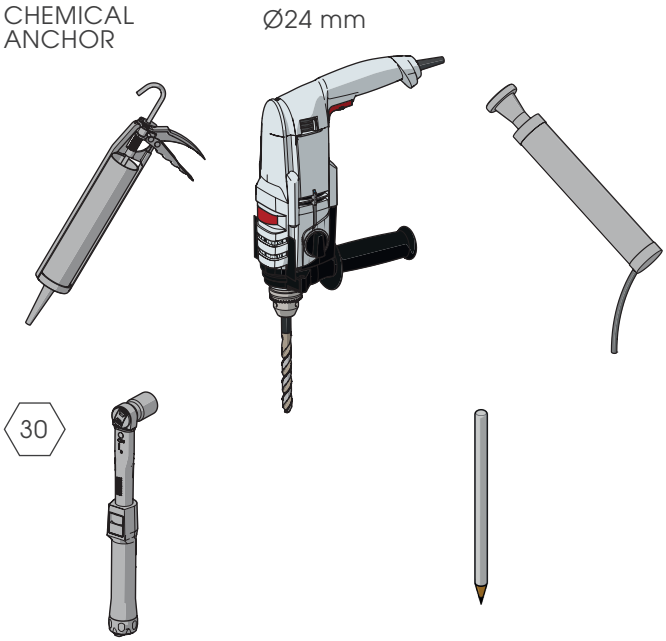

1

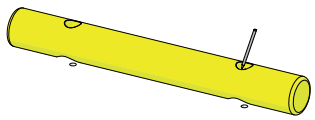

2

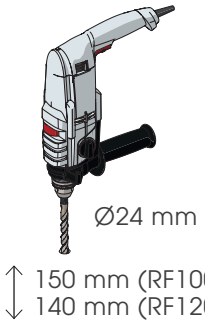

3

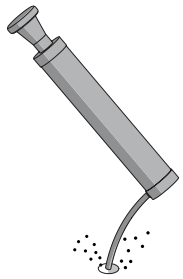

4

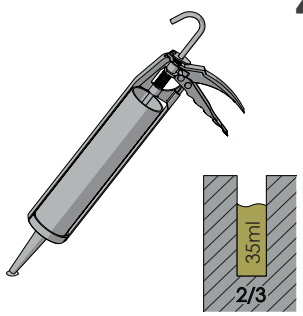

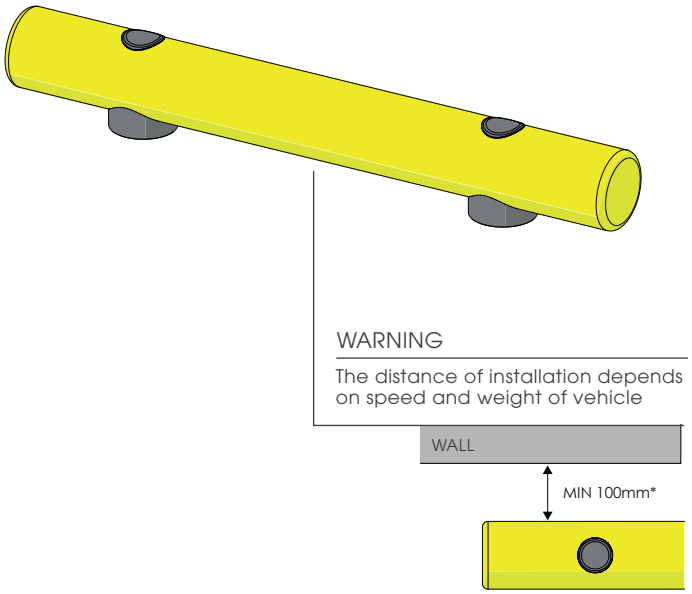

ROD FLOOR 100/120

ISTRUZIONI DI INSTALLAZIONE
ASSEMBLY INSTRUCTIONS

-30°
RESISTANT TO LOW TEMPERATURES

ONLY WITH RESIN

SF20
STAINLESS STEEL

ANCHOR
(FR)

5

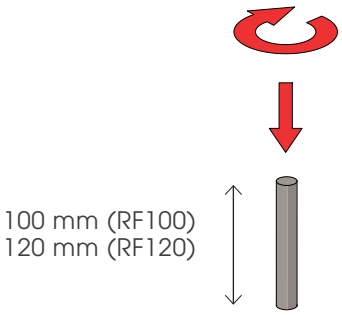

6

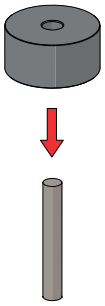

7

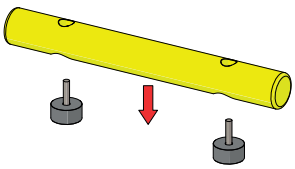

8

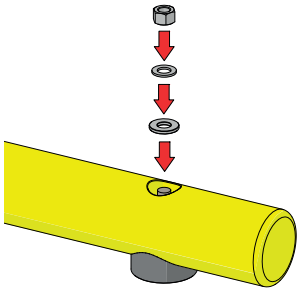

T=120Nm **9**

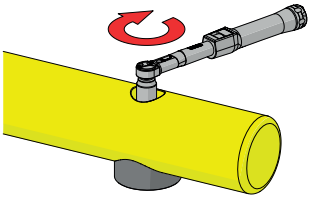
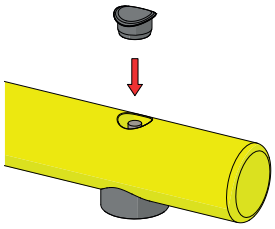
10